Model No. UB1102 BLOWER

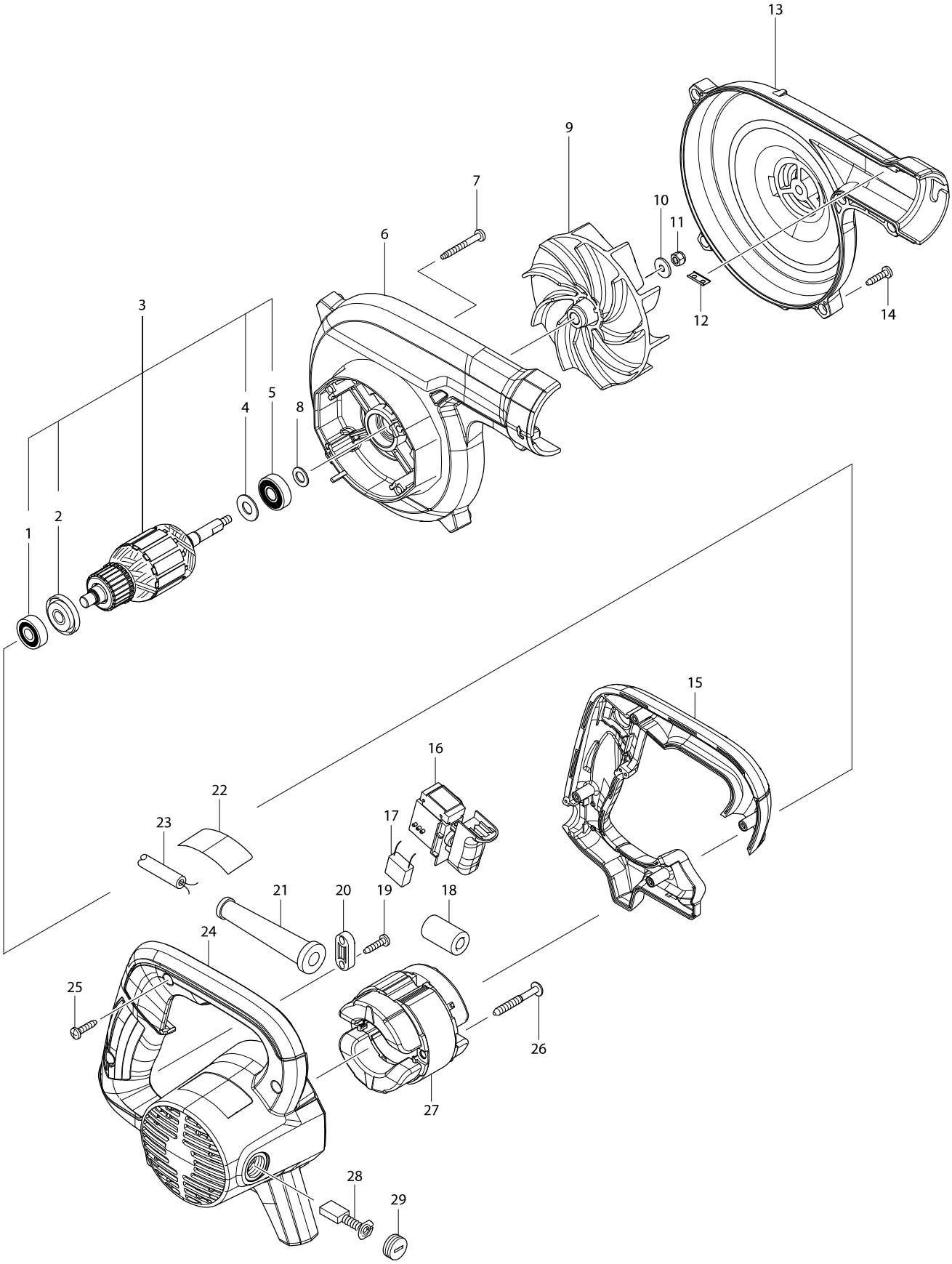

Model No. UB1102 BLOWER

Item	Parts No.	Description	I/C	QTY	N/O	Sales	Purch.	NOTE
001	210044-4	BALL BEARING 608DDW		1				
002	681644-1	INSULATION WASHER		1				
003	513904-2	ARMATURE ASS'Y 240V		1				
D10		INC. 1,2,4,5						
004	267237-4	FLAT WASHER 9		1				
005	211491-2	BALL BEARING 609DDW		1				
006	142292-6	FAN HOUSING COMPLETE		1				
007	266351-3	TAPPING SCREW 4X35		4				
008	267240-5	FLAT WASHER 8		1				
009	240148-8	FAN 110		1				
010	267294-2	FLAT WASHER 5		1				
011	252103-8	HEX. LOCK NUT M5-8		1				
012	345998-7	SET PLATE		1				
013	454702-4	FAN COVER		1				
014	266326-2	TAPPING SCREW 4X18		5				
015	454700-8	HANDLE COVER		1				
016	651359-4	SWITCH TG813TB-3		1				
017	645190-8	NOISE SUPPRESSOR		1				
018	688162-0	LINE FILTER		1				
019	266326-2	TAPPING SCREW 4X18		2				
020	687124-5	STRAIN RELIEF		1				
021	682569-2	CORD GUARD 8-85		1				
022	815D32-6	UB1102 NAME PLATE		1				
023	665394-6	POWER SUPPLY CORD 1.0-2-2.5		1				
024	142291-8	MOTOR HOUSING COMPLETE		1				
C10	643708-9	BRUSH HOLDER 5-11		2				
025	266326-2	TAPPING SCREW 4X18		4				
026	266211-9	TAPPING SCREW 5X40		2				
027	599047-4	FIELD ASS'Y 240V		1				
C10	654020-2	RING TERMINAL		2				
C20	654501-6	CONNECTOR P-1.25		2				
028	191963-2	CARBON BRUSH CB-303		1				
029	643750-0	BRUSH HOLDER CAP 7-11		2				
A01	123245-4	NOZZLE ASS'Y		1				
C10	454703-2	JOINT		1				

Please order the parts with a part number.

Print Date 09/11/2015